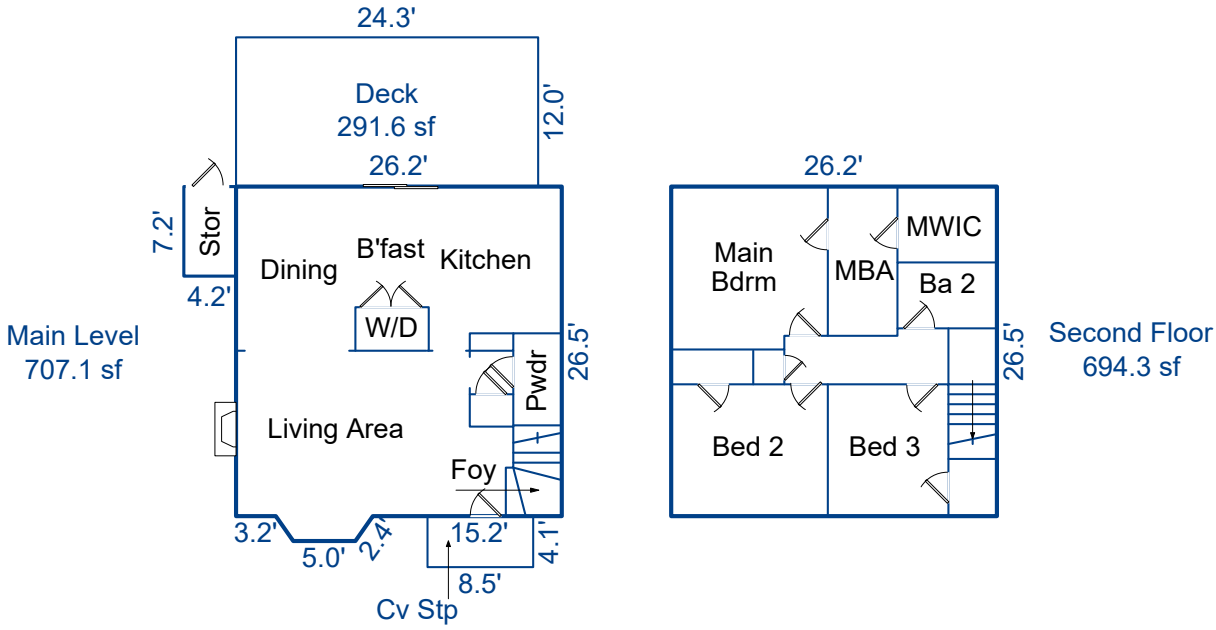
24.3'
Deck
291.6 sf
12.0'
26.2'
7.2'
Stor
4.2'
Dining
B'fast
Kitchen
W/D
Main Level
707.1 sf
26.5'
Pwdr
Living Area
Foy
3.2'
5.0'
2.4'
15.2'
4.1'
8.5'
Cv Stp
26.2'
Main
Bdrm
MBA
MWIC
Ba 2
26.5'
Second Floor
694.3 sf
Bed 2
Bed 3